DAB	**Pump Model - version** JET 300 M - N.1.- - Attention: check the correspondence with the serial number of the pump.	Company Name Contact Telephone FAX E-Mail address	**Receiver** / **From**
Serial Number			Page: 1

JET 300 M - N.1.- - @ 102160162_d

JET 300 M @ 102160162

Item	Quant	Item no.	Description	Unit pr.
1	1	R00005221	PUMP BODY	On req.
13	1	R00004703	FAN GUARD	On req.
12	1	R00005199	FAN	On req.
3	1	R00005200	SUPPORT	On req.
7	1	R00005271	MOTOR SHAFT	On req.
28	1	R00005228	OR	On req.
45	1	R00005229	NUTS AND BOLTS	On req.
19	1	R00005258	FRONT BEARING	On req.
20	1	R00005205	REAR BEARING	On req.
4	1	R00005231	IMPELLER	On req.
11	1	R00005232	MOTOR COVER	On req.
10	1	R00005233	MOTOR	On req.
16	1	R00005210	SEAL	On req.
14	1	R00005234	TERMINAL BOARD	On req.
8	1	R00005212	NOZZLE VENTURI	On req.
25	1	R00005213	LOAD PLUG	On req.
26	1	R00005428	DISCHARGE PLUG	On req.
23	1	R00005230	CAPACITOR	On req.

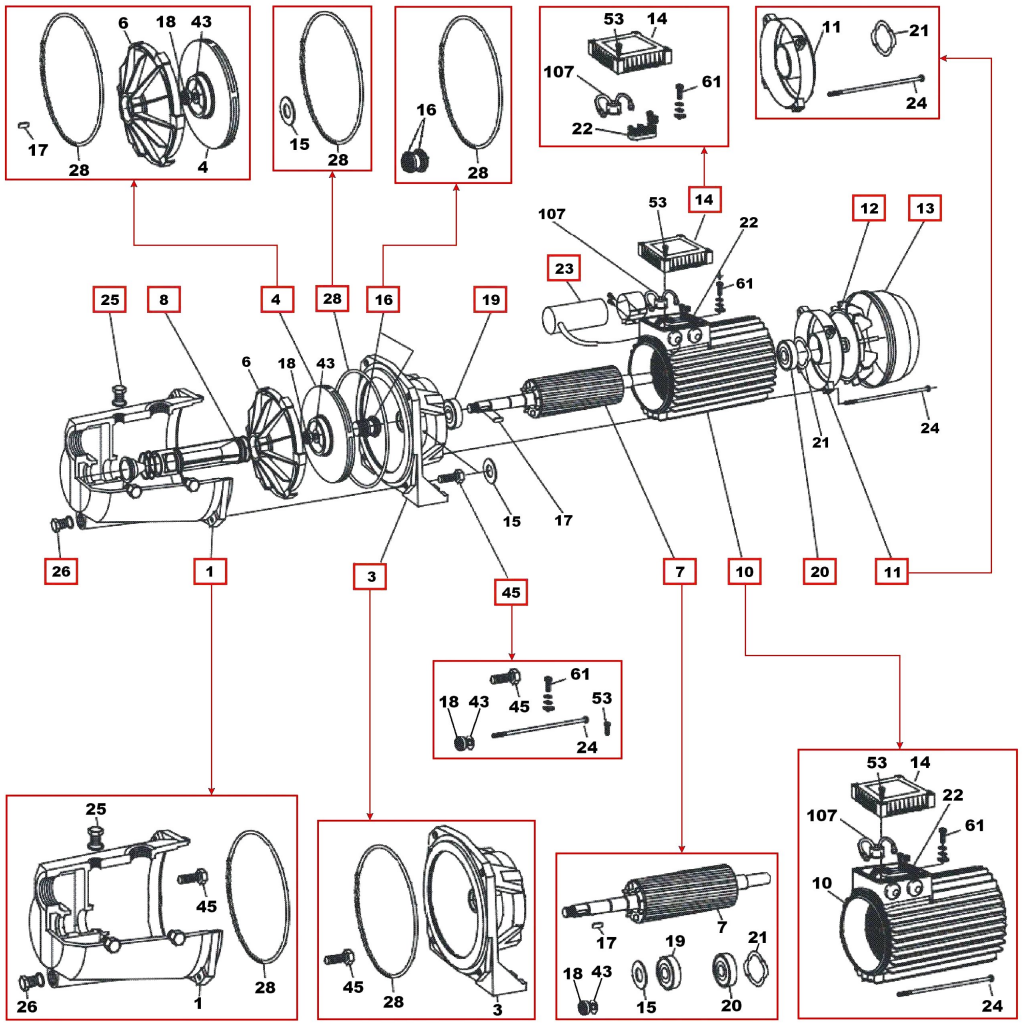

Project	Project ID	Created by	Created on	Last update
			2011-01-06	